

DECONTAMINATION GATE

ESTRELLA

ESTRELLA
Q-SILVER

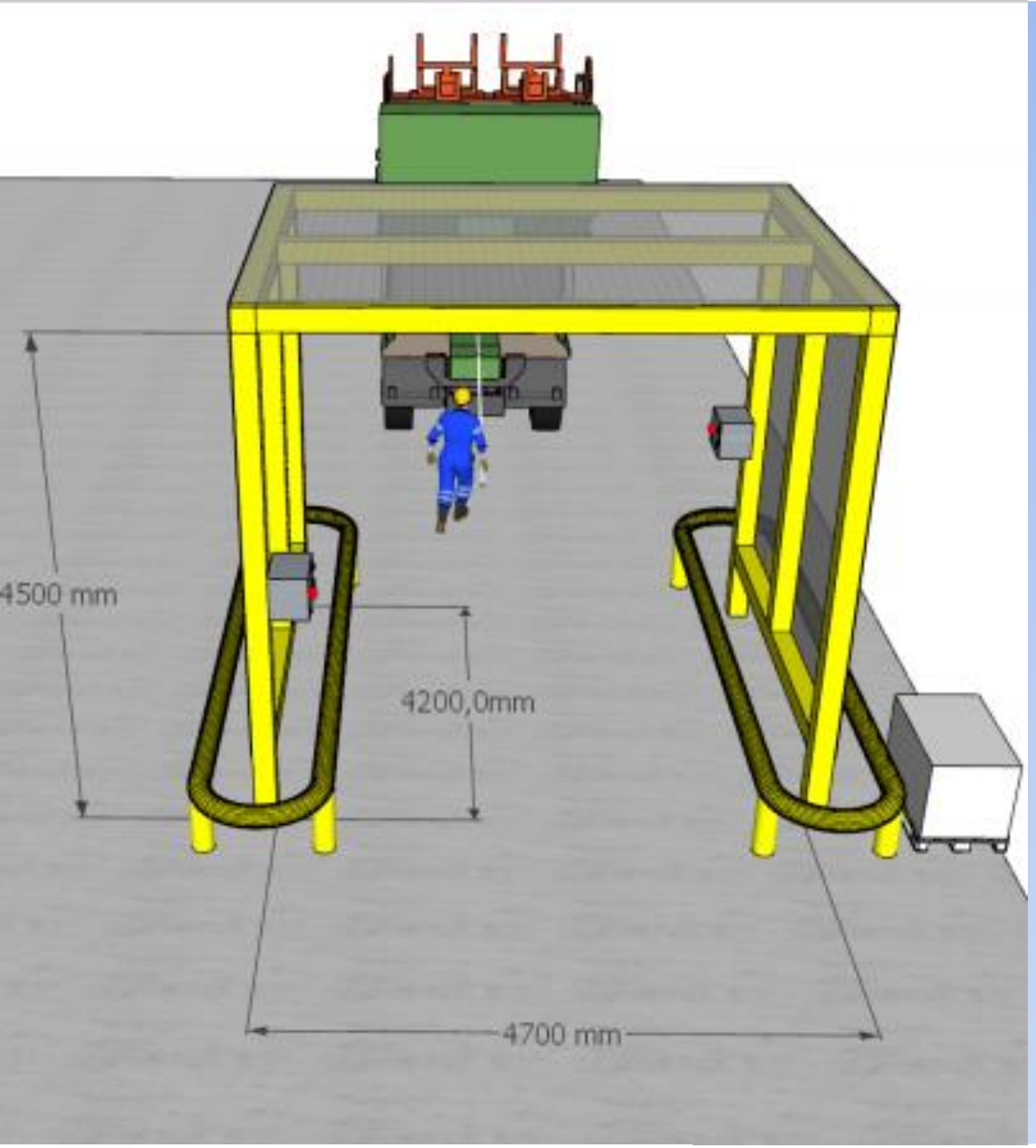

PRODUCT INTRODUCTION:

The Disinfection Gate is an innovative solution for the disinfection of means of transport entering an industrial plant, hall or warehouse. It allows for quick and continuous disinfection, while maintaining safety rules.

By erecting our Disinfection Gates you can improve the safety of plant employees and visitors.

ESTRELLA

ESTRELLA
Q-SILVER

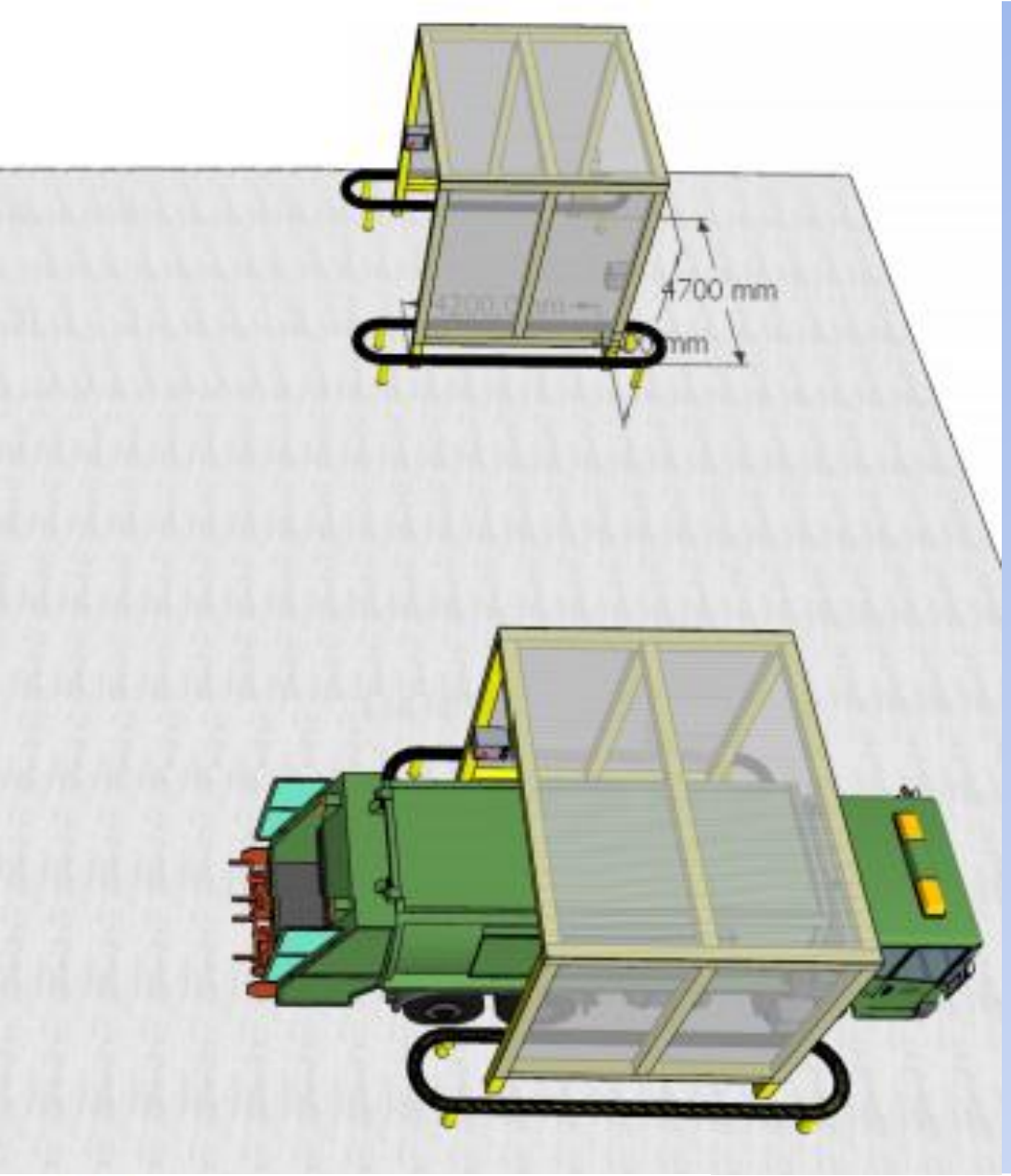

PROVEN DISINFECTION PRODUCT :

In our tunnels we use the proven ESTRELLA Q-SILVER agent, which combats all kinds of pathogens, bacteria, fungi, yeasts and moulds.

It is made in nanotechnology based on silver particles, non-alcoholic, which makes it not irritate the eyes, unlike other means available on the market.

ESTRELLA

ESTRELLA
Q-SILVER

AUTOMATICS

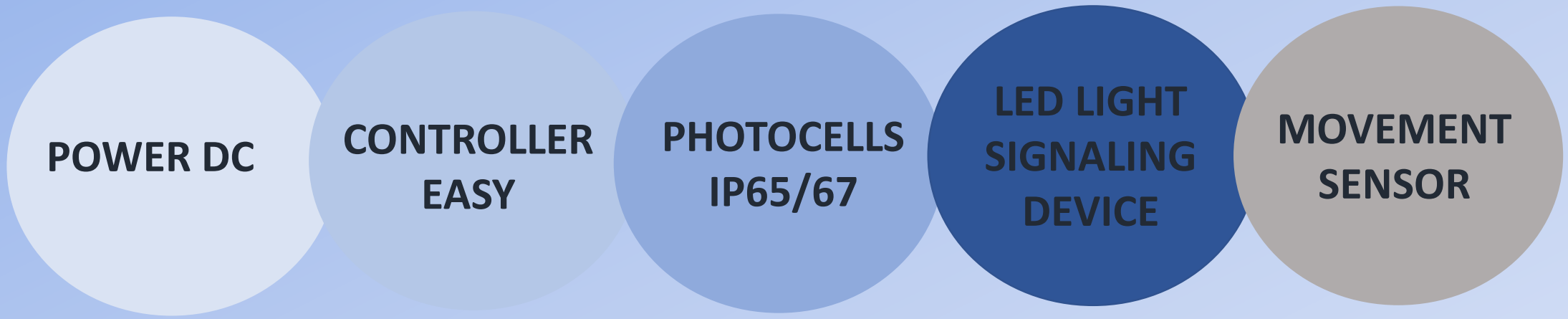
POWER DC
CONTROLLER EASY
PHOTOCELLS IP65/67
LED LIGHT SIGNALING DEVICE
MOVEMENT SENSOR

POWER

WATER PUMP

About 10l/min
at 6-10 bar

PRESSURE VALVE

RELIEF VALVE

START/STOP SENSOR

GATE CONSTRUCTION

SIDE HEADS 8 PCS.	TOP HEADS 3 PCS.	LOWER HEADS 3 PCS.	RUBBER PARTS 14 PCS.	CONNECTING CABLE AROUND 10-12 M	CONNECTION WITH VALVE

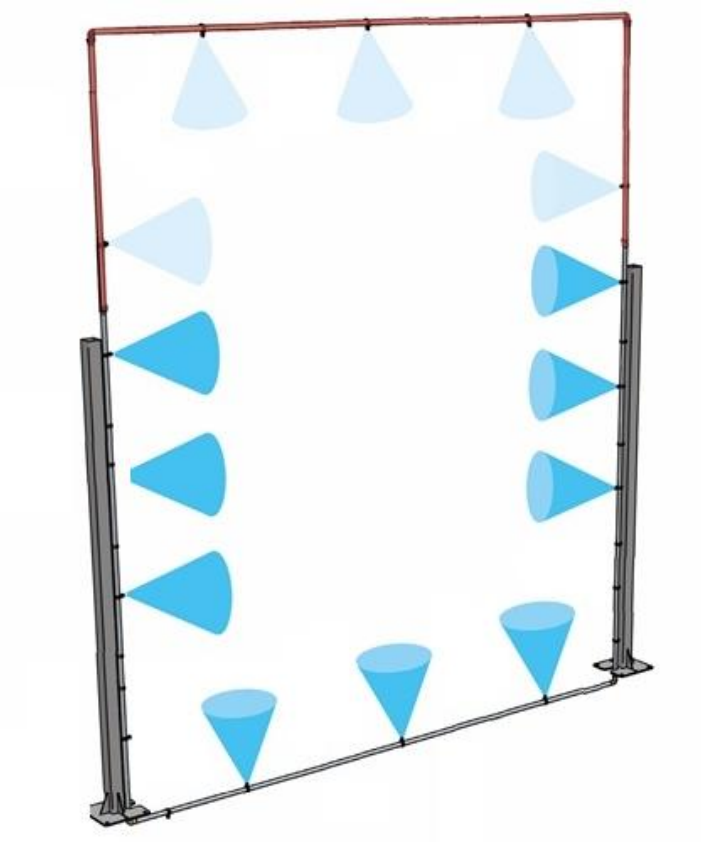

The biggest advantage of using this type of nozzles is that the ESTRELLA Q-SILVER is broken down into particles of the order of micrometers.
Such a huge fragmentation of the metal increases its effectiveness, due to the millions of times higher active area of the metal in relation to its mass.

ESTRELLA

ESTRELLA
Q-SILVER

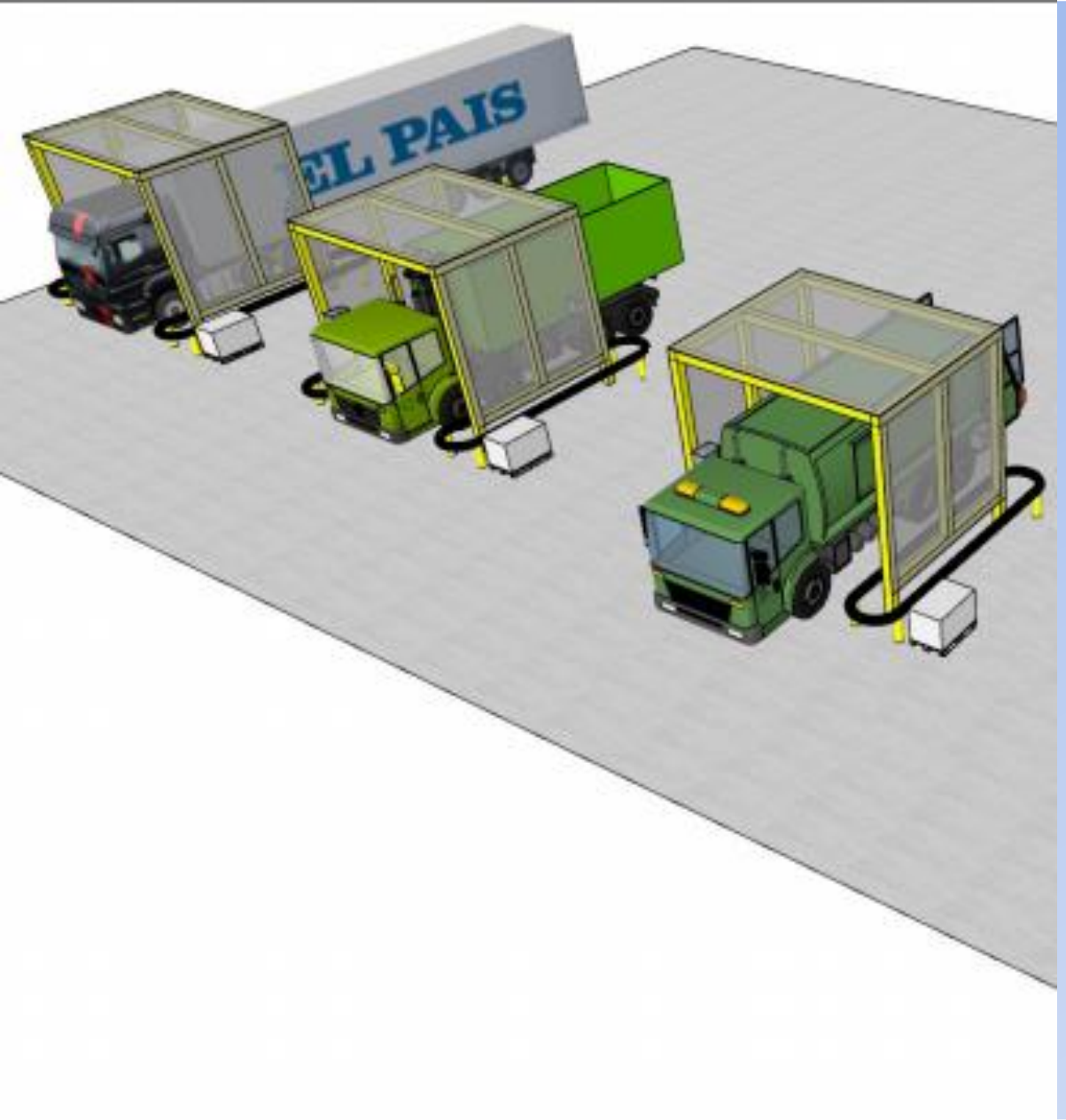

TECHNICAL SPECIFICATIONS OF THE NOZZLES:

Working pressure: 3-10 [bar]
Droplet size: 30-150 [µm]
Average flow factor: 0,16
Flow rate: 0,28-0,52 [dm^3/min]
Material: Stainless steel
Total flow surface: 0,32 [mm^2]
Connection size: 3/8" BSP female
Inlet pressure: 3-10 [bar]
Nozzle weight: 0,01 [kg]

ESTRELLA

ESTRELLA
Q-SILVER

INVESTMENT COST

- "Decontamination Gate" equipment
  The above equipment can be installed inside the hall entry docks/frames, plants without the need for additional structures.
- Close to tunnel construction with visualisation attached
  (For outdoor decontamination applications it is recommended to build a tunnel structure)
- Pump shed and two tanks for the preparation of 1000 litres each

The cost of individual elements will be determined INDIVIDUALLY.

The dimensions of the shelter will be adjusted to the technical needs of the building.

INSTALLATION

As an option, a disinfection tunnel installation service is available from our website at the price of: **800 EUR** per installation day (two fitters are foreseen) (service abroad: transport and accommodation costs must be reimbursed).

In the case of standard assembly, we foresee one day (8h) of assembly

CONTACT

SPAIN:

- Dariusz Perski
  mobile: +34 642 487 289
  E-mail: valencia@polalpine.com
  region: Valencia, Catalonia

- Mirosław Gorczyca
  mobile: +34 606 685 953
  E-mail: alicante@polalpine.com
  region: Alicante, Malaga

ITALY:

- Tomasz Szewczyk
  mobile: +39 371 321 8191
  mobile: +48 531 422 715
  E-mail:
  direttore.tomasz@gmail.com

POLAND:

- Dariusz Stachlewski
  tel.: +48 796 410 513
  Email:
  darek.stachlewski@intervent.pl

- Stanisław Karpiński
  tel.: +48 575 120 449
  E-mail: estrella@polalpine.com

- Tomasz Cieślak
  tel.: +48 509 612 998
  E-mail: estrella@polalpine.com

ESTRELLA

ESTRELLA
Q-SILVER